Published on *Mechanical Engg Simple Notes ,Solved problems and Videos* (https://mechdiploma.com)

Examination: 2017 SUMMER

Que.No	Marks	
Q 1 i)	2	Question: **Define self-energizing and self-locking brake.** Answer: **Self energizing & Self Locking brake** Rn x X = PL + μaRn Rn = Normal reaction, P = Applied force, L = lever length X = Distance of block from hinge, μ= coefficient of friction, a = distance of drum from hinge In the above equation when frictional force adds to the breaking torque. In other words, the frictional torque and braking torque are in the same direction its a self locking brake. In the above equation when X < μa, P becomes negative Hence, P is not required for braking and brake gets applied on its own. It is called as self energizing brake. ----------
Q 1 m)	2	Question: **What are the limitations of shoe brake ?** Answer: **Limitations of a shoe brake :** 1. Heavy side thrust causes bending of the shaft. 2. More wear & tear as the contact surface is large. ----------

Que.No	Marks	
Q 1 n)	2	Question: **Define uniform wear theory and uniform pressure theory.** Answer: Uniform Wear theory: When the product of pressure and area of the contacting surface transmitting load is taken as constant to determine the axial force & torque, it is termed as uniform wear theory as it is assumed that wear along the surface is uniform. ----------
Q 4 e)	4	Question: **Explain the working of internal expanding brake with neat sketch.** Answer: **Internal Expanding shoe brake:** 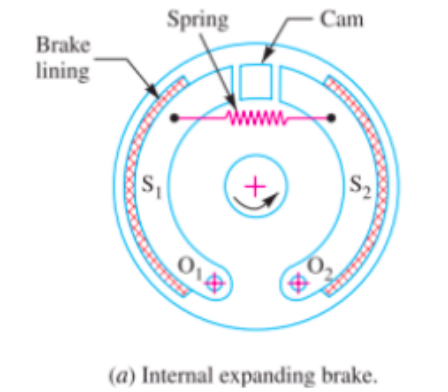 (*a*) Internal expanding brake. An internal expanding brake consists of two shoes S1 and S2. The outer surface of the shoes are lined with some friction material (usually with Ferodo) to increase the coefficient of friction and to prevent wearing away of the metal. Each shoe is pivoted at one end about a fixed fulcrum O1and O2 and made to contact a cam at the other end. When the cam rotates, the shoes are pushed outwards against the rim of the drum. The friction between the shoes and the drum produces the braking torque and hence reduces the speed of the drum. The shoes are normally held in off position by a spring . The drum encloses the entire mechanism to keep out dust and moisture. This type of brake is commonly used in motor cars and light trucks. ----------

Que.No	Marks	
Q 4 f)	4	Question: **A shaft has number of collars integral with it. The external diameter of the collars is 400 mm and the shaft diameter is 250 mm. If the uniform intensity of pressure is 0.35 N/mm2 and its co-efficient of friction is 0.05; find (i) power absorbed in overcoming friction when shaft rotates at 105 rpm and carries a load of 150 kN, and (ii) number of collars required.** Answer: Given : $d_1 = 400$ mm or $r_1 = 200$ mm ; $d_2 = 250$ mm or $r_2 = 125$ mm ; $p = 0.35$ N/mm^2 ; $\mu = 0.05$; $N = 105$ r.p.m or $\omega = 2\pi \times 105/60 = 11$ rad/s ; $W = 150$ kN $= 150 \times 10^3$ N 1. *Power absorbed* We know that for uniform pressure, total frictional torque transmitted, $T = \frac{2}{3} \times \mu.W \left[\frac{(r_1)^3 - (r_2)^3}{(r_1)^2 - (r_2)^2}\right] = \frac{2}{3} \times 0.05 \times 150 \times 10^3 \left[\frac{(200)^3 - (125)^3}{(200)^2 - (125)^2}\right]$ N-mm $= 5000 \times 248 = 1240 \times 10^3$ N-mm $= 1240$ N-m ∴ Power absorbed, $P = T.\omega = 1240 \times 11 = 13640$ W $= 13.64$ kW Ans. 2. *Number of collars required* Let n = Number of collars required. We know that the intensity of uniform pressure (p), $0.35 = \frac{W}{n.\pi[(r_1)^2 - (r_2)^2]} = \frac{150 \times 10^3}{n.\pi[(200)^2 - (125)^2]} = \frac{1.96}{n}$ ∴ $n = 1.96/0.35 = 5.6$ say 6 Ans. ----------

Que.No	Marks	
Q 6 c)	4	Question: **Explain the working of rope brake dynamometer with neat sketch** Answer: It is another form of absorption type dynamometer which is most commonly used for measuring the brake power of the engine. It consists of one, two or more ropes wound around the flywheel or rim of a pulley fixed rigidly to the shaft of an engine. The upper end of the ropes is attached to a spring balance while the lower end of the ropes is kept in position by applying a dead weight as shown in Fig. In order to prevent the slipping of the rope over the flywheel, wooden blocks are placed at intervals around the circumference of the flywheel. In the operation of the brake, the engine is made to run at a constant speed. The frictional torque, due to the rope, must be equal to the torque being transmitted by the engine. Let W = Dead load in newtons, S = Spring balance reading in newtons, D = Diameter of the wheel in metres, d = diameter of rope in metres, and N = Speed of the engine shaft in r.p.m. ∴ Net load on the brake $= (W - S)$ N We know that distance moved in one revolution $= \pi(D+d)$ m ∴ Work done per revolution $= (W - S)\pi(D+d)$ N-m and work done per minute $= (W - S)\pi(D+d)\,N$ N-m 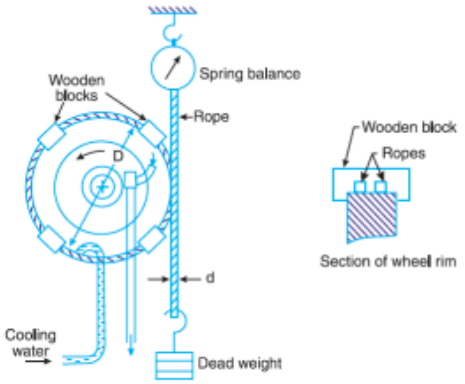 Rope brake dynamometer. ∴ Brake power of the engine, $\text{B.P} = \frac{\text{Work done per min}}{60} = \frac{(W-S)\,\pi\,(D+d)N}{60}$ watts If the diameter of the rope (d) is neglected, then brake power of the engine, $\text{B.P.} = \frac{(W-S)\pi D\,N}{60}$ watts

---

Examination: 2017 WINTER

Que.No	Marks	
Q 1a)(g)	2	Question: **Compare brakes and dynamometers. (any two points)** Answer: Compare Brakes & Dynamometers: A dynamometer is a mechanical device used to indirectly measure the power output of a prime mover like an engine or a motor. Examples: hydraulic brake dynamometer, eddy current dynamometer, prony brake dynamometer. A brake is a mechanical device usually found in automobiles that helps in decelerating a vehicle and brings it to a complete stop. Examples: internal expanding shoe brake, single and double shoe brake, simple and differential band brake. ----------
Q 4 d)	4	Question: **Explain with neat sketch construction and working of eddy current dynamometer.** Answer: **Eddy Current Dynamometer :** It consists of a stator on which are fitted a number of electromagnets and a rotor disc made of copper or steel and coupled to the output shaft of the engine. When the rotor rotates, eddy currents are produced in the stator due to magnetic flux set up by the passage of field current in the electromagnets. These eddy currents oppose the motion of the rotor thus loading the engine. The eddy currents are dissipated in producing heat so that this type of dynamometer also requires some cooling arrangements. The torque is measured similar to absorption dynamometers i.e. with the help of moment arm. The load is controlled by regulating the current in the electromagnets. 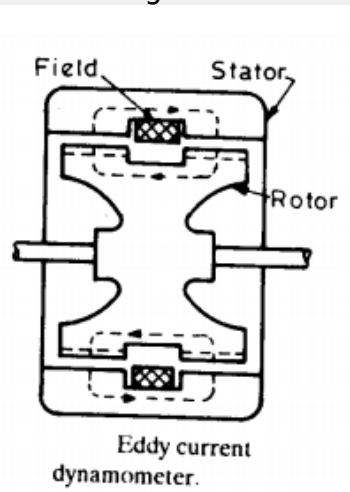 Eddy current dynamometer. ----------

Que.No	Marks	
Q 6 b)	8	Question: **A simple band brake is operated by lever 40 cm long. The brake drum diameter is 40 cm and brake band embrance 5/8 of its circumference. One end of band is attached to a fulcrum of lever while other end attached to pin 8 cm from fulcrum. The co-efficient of friction is 0.25. The effort applied at the end of lever is 500 N. Find braking torque applied if drum rotates anti-clockwise and acts downwards.** Answer: Simple band brake: 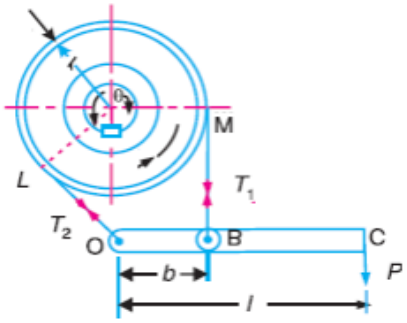 Simple band brake. (Anticlockwise rotation of drum.) Given: Length of lever l = 40 cm = 0.4m, diameter d = 40 cm = 0.4, μ = 0.25, b =0 .08 m Θ = Angle of wrap = 5/8 x 360 = 225 x π /180 = 3.93 rad Braking torque = (T1 –T2) x r T1/T2 = e μΘ = e 0.25 x 3.93 = 2.67 Taking moments about fulcrum P x l = b x T1 500 x 0.40 = 0.08 x T1 T1 = 2500 N T2 = 2500 / 2.67 = 936.3 N Braking Torque = (2500 – 936.3) x 0.2 = 312.74 N-m ----------

Examination: 2016 SUMMER

Que.No	Marks	
Q 1a)(vii)	2	Question: **State the application of (i) Disc brake (ii) Internal expanding brake** Answer: (i) Disc brake: Used in two wheelers as well as in four wheelers. (ii) Internal expanding brake: Used in motor cars, light trucks, two wheelers etc. ----------

Que.No	Marks	
Q 4 d)	4	Question: **Explain construction and working of eddy current dynamometer.** Answer: **Construction and Working of Eddy current dynamometer :** 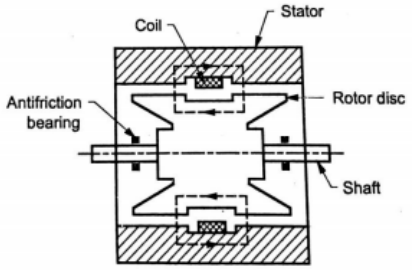 Sketch represents working principle of this transmission type dynamometer, to measure torque and hence power output of an engine. • It consists of rotor disc made of steel or copper. The rotor shaft is supported in bearings and it is coupled to engine shaft. • Stator is fitted with number of electromagnets and the stator cradles in the trunion bearings. When rotor rotates, it produces eddy currents in the stator due to magnetic flux by passage of field current in the electromagnets. • These currents oppose the rotor motion, thus loading the engine. • The torque is measured with the help of torque arm. • This dynamometer requires some cooling arrangement since the eddy current generate heat. • This dynamometer is compact and versatile; as it can measure high power output at all speeds. These are used to test automobile and aircraft engines. ----------

Que.No	Marks	
Q 6 b)	8	Question: **A simple band brake shown in figure 2 is applied to a shaft carrying a flywheel of mass 250 kg and of radius of gyration 300 mm. The shaft speed is 200 rpm. The drum diameter is 200 mm and the coefficient of friction is 0.25. The dimensions a and l are 100 mm and 280 mm respectively and the angle β = 135o. Determine (i) the brake torque when a force of 120 N is applied at the lever end. (ii) the number of turns of the flywheel before it comes to rest. (iii) the time taken by flywheel to come to rest.** Answer: **A simple band brake drum:**

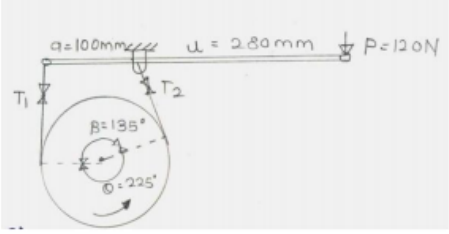

Sol Given:- **P = 120 N**
N = 200 rpm
D = 200 mm = 0.2m
θ = 225° = 3.92 rad
K = 0.3m
a = 100 mm = 0.1m
l = 280 mm = 0.28m
$\mu = 0.25$

Ans:-

$$\frac{T_1}{T_2} = e^{\mu\theta} \quad \frac{T_1}{T_2} = e^{(0.25)(3.92)} \quad \frac{T_1}{T_2} = 2.669$$ ----------**01 mark**

$$P = \frac{T_2 \text{ X } x}{u} = 120 = \frac{T_2 \text{ X } 0.1}{0.28}$$

$$T_2 = 336 \text{ N}$$ ----------**01 mark**

$$T_1 = T_2 \text{ X } 2.669$$

$$T_1 = 336 \text{ X } 2.669 \;\; ; T_1 = 896.784 \text{ N}$$ ----------**01 mark**

$$T_B = (T_1 - T_2)R \quad T_B = (896.784 - 336)0.1$$

$$T_B = 56 \text{ N.m}$$ ----------**01 mark**

1) K. E. of Flywheel:-

$$\frac{1}{2} I \omega^2 = \frac{1}{2} \text{ X } (mk^2)\left(\frac{2 \Pi N}{60}\right)^2$$

$$= \frac{1}{2} \text{ X } (250 \text{ X } 0.3^2)\left(\frac{2 \text{ X } \Pi \text{ X } 200}{60}\right)^2$$

$$= \frac{1}{2} \text{ X } 22.5 \text{ X } 438.64 \; ; \text{ K. E.} = 4934.80 \text{ N. m}$$ ----------**02 mark**

Let n = Number of revolution before it comes to rest

Work done = $T_b \text{ X } \theta = T_b \text{ X } 2 \text{ X } \Pi \text{ X } n$

$= 56.07 \text{ X } 2 \text{ X } \Pi \text{ X } n$

$= (352.298 \text{ X } n) \text{ N.m}$ ---------**1 mark**

Work done = change in K. E.

$$n = \frac{4934.80}{352.298} \quad ; \quad n = 14.007$$ ----------**1 mark**

Que.No	Marks	
Q 6 c)	8	Question: **A conical pivot with angle of cone as 100o, supports a load of 18 kN. The external radius is 2.5 times the internal radius. The shaft rotates at 150 rpm. If the intensity of pressure is to be 300 kN/m2 and coefficient of friction as 0.05, what is the power lost in working against the friction ?** Answer: **Given data,** $2\alpha = 100^0$ $\quad \alpha = 50^0$ $W = 18\,KN$ $\quad P_{max} = 300 \times 10^3\ N/m^2$ $\mu = 0.05$ $\quad N = 150\,rpm$ $R_1 = 2.5\,R_2$ $W = P \times \Pi (R_1^2 - R_2^3)$ **----------1 mark** $18 \times 10^3 = 300 \times 10^3 (3.142)((2.5R_2)^2 - (R_2)^2$ $0.019 = 1.5\,R_2^2$ $R_2 = 0.11\,m$ **----------1 mark** $R_1 = 2.5 \times 0.11$; $R_1 = 0.281m$ **----------1 mark** $\therefore T = \frac{2}{3}\mu W \frac{(R_1^3 - R_2^3)}{(R_1^2 - R_2^2)\sin\alpha}$ **----------2 marks** $\therefore T = \frac{2}{3}\frac{0.05 \times 18 \times 10^3((0.281)^3 - (0.11)^3)}{((0.281)^2 - (0.11)^2)\sin 50^0}$ $T = \frac{16.336}{((0.281)^2 - (0.11)^2)}$ $T = 244.33\,N.m$ **----------1 mark** $P = \frac{2\Pi N T}{60} = \frac{2 \times \Pi \times 150 \times 244.33}{60} = 3.837 \times 10^3$ Watt $= 3.837$ K Watt **Power Lost = 3.837 KW----------2 marks** ----------

Examination: 2016 WINTER

Que.No	Marks	
Q 3 d)	4	Question: **State the applications of : (i) Band brake (ii) Disc brake (iii) Internal expanding shoe brake (iv) External shoe brake** Answer: **SR. No.** | **Name of brake** | **Applications** 1 | Band brake | Drums and chain saws, Railway braking system. 2 | Disc brake | Any rotating shaft, motor cycles 3 | Internal expanding brake | All type of light vehicles(motor cars, 2 wheelers),light truks 4 | External shoe brake | Railway coach, electric cranes ----------

Que.No	Marks	
Q 4 d)	4	Question: **Discuss the working of Rope brake dynamometer with the help of a neat sketch.** Answer: 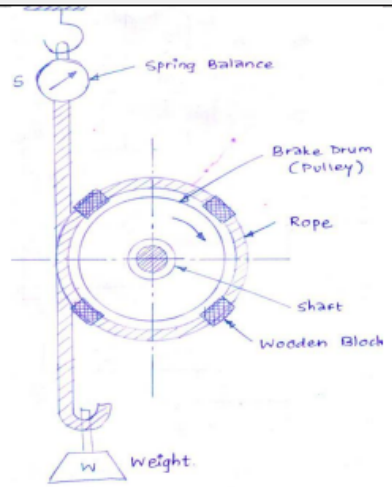 It consist of two or more ropes wound around flywheel on ream of pulley rigidly fixed to the shaft of an engine. The upper end of rope is attached to a spring balance while the lower end of the rope is kept in position by applying dead weight. To prevent slipping of rope over flywheel wooden blocks are used which is placed at intervals around the circumference of flywheel. The operation of brake the engine is made to run at constant speed the frictional torque due to rope must be equal to torque being transmitted by the engine. Net brake load = W − S. Therefore, frictional torque due to ropes = torque transmitted by engine at constant speed. Brake power (P) = Torque transmitted into angular speed of engine. If diameter of rope is neglected then, $P = \frac{(W-S)\pi DN}{60}$ **Applications:-**It is commonly used for measuring brake power of the engine. ----------

Que.No	Marks	
Q 4 e)	4	Question: **Explain the working of internal expanding shoe brake with the help of neat sketch.** Answer: 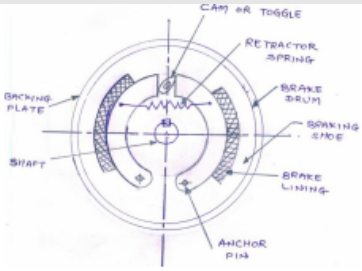 fig. shows a mechanical brake or internal expanding brake used in automobile vehicles. **Construction:-** 1) It consists of two semi-circular brake shoe having friction lining on their outer surface. 2) Brake shoes are hinged to back plate at lower end by an anchor pin while other end rest on cam. 3) The cams turns or actuate by camshaft passes through the hole in back plate. 4) The camshaft can be operated by brake pedal through linkage. 5) The outer portion of brake is brake drum which encloses the complete brake msm and protect it from dust and moisture. **Working:-** 1) When break pedal is pressed the cam turn to outwear by expanding the brake shoe against the retractor spring force. 2) The friction lining comes in contact with drum and causes friction between them. 3) This force of friction oppose the direction of motion and by reducing the speed or stop vehicle. 4) When brake pedal is released the retracting spring pull the brake shoe inward which turn the cam and brakes are released. m = Mass attached to shafts, r = Distance of CG from axis of rotation. Consider mass 'm' is attached to rotating shaft at a radius are then the centrifugal force exerted by mass 'M' on the shaft is **Fc = Mw²R** Where, W = Angular velocity of shaft R = Distance of CG from axis of rotation ----------
Q 5 c)	8	Question: Answer: Band and block brake No. of blocks n=14 ; θ= 16° ;$\mu = 0.3$ braking force= 300N $\frac{Tn}{To} = [\frac{1+\mu \tan\frac{\theta}{2}}{1-\mu \tan\frac{\theta}{2}}]^n$ =3.26 .... 4 M To X 10=300 X 60 ; To =1800 N ; Tn = 1800 X 3.26 = 5868 N Let r_b = radius of brake drum (Not given). If we consider it as 10 cm, r_b = (5868-1800) X 0.1 =406.8 N m ..... 4M ----------

Que.No	Marks	
Q 6a)(ii)	4	Question: **Differentiate between disc brake and internally expanding brake.** Answer: DISC BRAKE / DRUM BRAKE It uses disc shaped rotors / It uses cylindrical drum It uses a clamp called caliper to hold the friction 'pads' against rotor disc / It uses expanding hydraulic cylinder to press the friction material (shoes) against the inside of rotating drum. Good braking even at high temperature / Reduced performance at high temp. Better heat dissipation / Slower heat dissipation Fast braking, better braking force / Slow braking Cost is more / Cheaper than disc brake Generally Used for modern bikes, cars / Used for trucks, bus, scooter ----------
Q 6 c)	8	Question: **Determine the power lost in a footstep bearing due to friction if a load of 15 kN is supported and the shaft is rotating at 100 r.p.m. The diameter of bearing is 15cm and coefficient of friction is 0.05. Assume : (i) Uniform wear condition (ii) Uniform pressure condition.** Answer: $W = 15$ KN, $N = 100$ rpm, $r = 7.5$ cm $= 0.075$ m (i) Considering uniform pressure theory Torque, $T = \frac{2}{3} \mu W R$ N-m $= \frac{2}{3} \times 0.05 \times 15 \times 10^3 \times 0.075$ $= 37.5$ Nm ----- [2M] Power lost, $P = \frac{2\pi N T}{60 \times 1000} = 0.393$ KW --- [2M] (ii) Considering uniform wear theory Torque, $T = \frac{1}{2} \mu W R$ N-m $= \frac{1}{2} \times 0.05 \times 15 \times 10^3 \times 0.075$ $= 28.1$ N-m ---- [2M] Power lost, $P = \frac{2\pi N T}{60 \times 1000} = 0.294$ KW --- [2M] ----------

Examination: 2015 SUMMER

Que.No	Marks	
Q 1a)(g)	2	Question: **Give the classification of dynamometer. State the function of it.** Answer: **Function of dynamometer:** A dynamometer is a brake but in addition it has a device to measure the frictional resistance. Knowing the frictional resistance, we may obtain the torque transmitted and hence the power of the engine. Absorption type dynamometers: 1. Prony brake dynamometer, and 2. Rope brake dynamometer. Transmission type dynamometers 1. Epicyclic-train dynamometer, 2. Belt transmission dynamometer, and 3. Torsion dynamometer. ----------
Q 4 d)	4	Question: **Explain working of hydraulic brake dynamometer with sketch.** Answer: 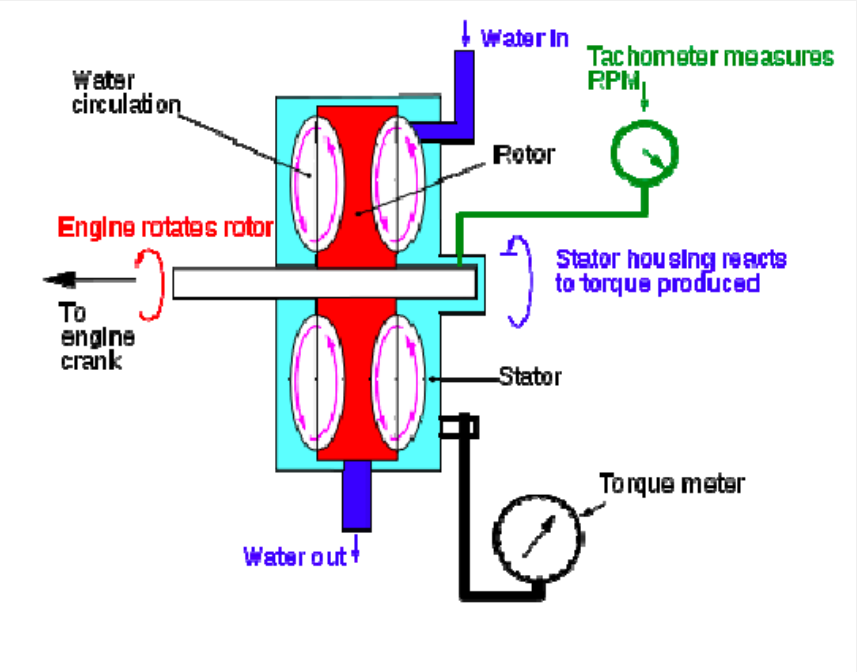 Hydraulic dynamometer is also called as water brake absorber. Invented by British engineer William Froude in 1877 in response to a request by the Admiralty to produce a machine capable of absorbing and measuring the power of large naval engines, water brake absorbers are relatively common today. The schematic shows the most common type of water brake, known as the "variable level" type. Water is added until the engine is held at a steady RPM against the load, with the water then kept at that level and replaced by constant draining and refilling (which is needed to carry away the heat created by absorbing the horsepower). The housing attempts to rotate in response to the torque produced, but are restrained by the scale or torque metering cell that measures the torque. ----------

Que.No	Marks	
Q 4 f)	4	Question: **A thrust shaft of a ship has 6 collar of 600 mm external diameter and 300 mm internal diameter. The total thrust from the propeller shaft is 100 kN. If the coefficient of friction is 0.12 and speed of engine 90 rpm. Find power absorbed in friction at the thrust block using uniform pressure intensity condition.** Answer: **N =6, d_1 =600 mm, r1 =300 mm, d2 =300 mm, r2 =150 mm, W =100 kN =100 x 10^3 N μ = 0.12, N = 90 rpm, ω = 2 x π x N /60 = 2 x π x 90/ 60 =9.426 rad / sec** 1. *Power absorbed in friction, assuming uniform pressure* We know that total frictional torque transmitted, $T = \frac{2}{3} \times \mu W \left[\frac{(r_1)^3 - (r_2)^3}{(r_1)^2 - (r_2)^2} \right]$ $= \frac{2}{3} \times 0.12 \times 100 \times 10^3 \left[\frac{(300)^3 - (150)^3}{(300)^2 - (150)^2} \right] = 2800 \times 10^3$ N-mm $= 2800$ N-m ∴ Power absorbed in friction, $P = T.\omega = 2800 \times 9.426 = 26\,400$ W $= 26.4$ kW **Ans.** 2. *Power absorbed in friction assuming uniform wear* We know that total frictional torque transmitted, $T = \frac{1}{2} \times \mu W (r_1 + r_2) = \frac{1}{2} \times 0.12 \times 100 \times 10^3 \ (300 + 150)$ N-mm $= 2700 \times 10^3$ N-mm $= 2700$ N-m ∴ Power absorbed in friction, $P = T.\omega = 2700 \times 9.426 = 25\,450$ W $= 25.45$ kW **Ans.** ----------

Que.No	Marks	
Q 6 b)	8	Question: **A simple band brake is operated by lever 40 cm long. The brake drum diameter is 40 cm and brake band embrance 5/8 of its circumference. One end of band is attached to a fulcrum of lever while other end attached to pin 8 cm from fulcrum. The coefficient of friction 0.25. The effort applied at the end of lever is 500 N. Find braking torque applied if drum rotates anticlockwise and acts downwards.** Answer: $d = 0.4\,m,\ r = 0.2\,m,\ l = 0.4\,m,\ \mu = 0.25$ $\theta = \frac{5}{8} \times 360^\circ = 225^\circ = 3.92\ rad,\ b = 0.08\,m.$ We have, $\frac{T_1}{T_2} = e^{\mu\theta} = e^{0.25 \times 3.92} = 2.66$ ----(1) Braking Torque $T_B = (T_1 - T_2) \times r$ Taking moments about $P \times l = T_2 \times b$ $500 \times 0.4 = T_2 \times 0.08$ $\therefore T_2 = 2500\ N$ & $T_1 = 6650\ N$ So, $T_B = (6650 - 2500) \times 0.2$ $= 830\ N\text{-}m.$ 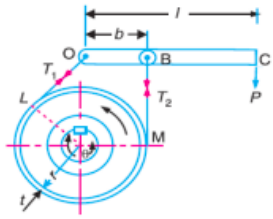 Anticlockwise rotation of drum. ----------

Examination: 2015 WINTER

Que.No	Marks	
Q 1a)(vii)	2	Question: **Compare brakes and dynamometers (two points).** Answer: **Brakes :** A brake is a device by means of which artificial frictional resistance is applied to a moving machine member, in order to retard or stop the motion of a machine. Types : Hydraulic brakes 1.Electric brakes 2.Mechanical brakes. The brake absorbs either kinetic energy of the moving member or potential energy given up by objects being lowered by hoists, elevators etc. The energy absorbed by brakes is dissipated in the form of heat. This heat is dissipated in the surrounding air (or water which is circulated through the passages in the brake drum) so that excessive heating of the brake lining does not take place. **Dynamometers :** A dynamometer is a brake but in addition it has a device to measure the frictional resistance. Knowing the frictional resistance, we may obtain the torque transmitted and hence the power of the engine. Types : 1. Absorption dynamometers, and 2. Transmission dynamometers ----------

Que.No	Marks	
Q 2 f)	4	Question: **A casting weighing 9 kN hangs freely from a rope which makes 2.5 turns round a drum of 300 mm diameter revolving at 20 rpm. The other end of the rope is pulled by a man. Taking μ = 0.25, determine (i) the force required by the man (ii) the power to raise the casting.** Answer: **Given: W= T1= 9 kN =9000N, d= 0.3 m, N = 20 rpm , μ= 0.25** **(i) Force reqd. by a man** T2- force reqd. by man As rope makes 2.5 turns, Therefore angle of contact , θ =2.5x2π = 5 π rad. We know that, **2.3 log {T1/T2} = μ θ** = 0.25 x 5 π = 3.9275 log {T1/T2} = 3.9275/2.3 = 1.71 or T1/T2 = 51 **T2 = 9000/51 = 176.47 N** **(ii) Power to raise casting :** As velocity of rope, v = πdN/60 = 3.14x0.3x20/60 = 0.3142 m/s Power to raise casting = **(T1-T2) x v** = (9000-176.47) x 0.3142 **= 2.772 kW.** ----------

Que.No	Marks	
Q 4 d)	4	Question: **Explain the working of rope brake dynamometer with neat sketch.** Answer: It is another form of absorption type dynamometer which is most commonly used for measuring the brake power of the engine. It consists of one, two or more ropes wound around the flywheel or rim of a pulley fixed rigidly to the shaft of an engine. The upper end of the ropes is attached to a spring balance while the lower end of the ropes is kept in position by applying a dead weight as shown in Fig. In order to prevent the slipping of the rope over the flywheel, wooden blocks are placed at intervals around the circumference of the flywheel. In the operation of the brake, the engine is made to run at a constant speed. The frictional torque, due to the rope, must be equal to the torque being transmitted by the engine. Let W = Dead load in newtons, S = Spring balance reading in newtons, D = Diameter of the wheel in metres, d = diameter of rope in metres, and N = Speed of the engine shaft in r.p.m. ∴ Net load on the brake $= (W - S)$ N We know that distance moved in one revolution $= \pi(D+d)$ m ∴ Work done per revolution $= (W - S)\pi(D+d)$ N-m and work done per minute $= (W - S)\pi(D+d)\,N$ N-m 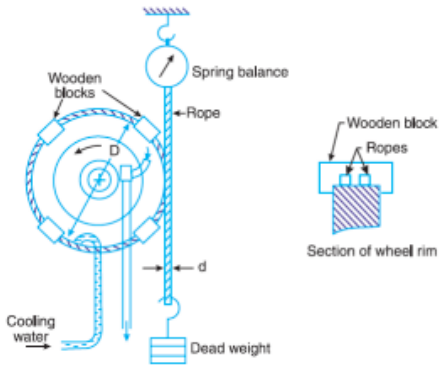 Rope brake dynamometer. ∴ Brake power of the engine, $\text{B.P} = \frac{\text{Work done per min}}{60} = \frac{(W-S)\,\pi\,(D+d)N}{60}$ watts If the diameter of the rope (d) is neglected, then brake power of the engine, $\text{B.P.} = \frac{(W-S)\pi D\,N}{60}$ watts ----------

Que.No	Marks	
Q 6 b)	8	Question: **In a simple band brake, the band acts on the 3/4th of circumference of a drum of 450 mm diameter which is keyed to the shaft. The band brake provides a braking torque of 225 N.m. One end of the band is attached to a fulcrum pin of the lever and the other end to a pin 100 mm from the fulcrum. It the operating force is applied at 500 mm from the fulcrum and the coefficient of friction is 0.25, find the operating force when the drum rotates in the (i) anticlockwise direction and ii) clockwise direction** Answer: We know that braking torque (T_B), $225 = (T_1 - T_2)\, r = (T_1 - T_2)\, 0.225$ $\therefore \quad T_1 - T_2 = 225 / 0.225 = 1000$ N . . . (*ii*) From equations (*i*) and (*ii*), we have $T_1 = 1444$ N; and $T_2 = 444$ N Now taking moments about the fulcrum O, we have $P \times l = T_2 . b$ or $P \times 0.5 = 444 \times 0.1 = 44.4$ $\therefore \quad P = 44.4 / 0.5 = 88.8$ N **Ans.** (*b*) *Operating force when drum rotates in clockwise direction* When the drum rotates in clockwise direction, as shown in Fig. (*a*), then taking moments about the fulcrum O, we have $P \times l = T_1 . b$ or $P \times 0.5 = 1444 \times 0.1 = 144.4$ $\therefore \quad P = 144.4 / 0.5 = 288.8$ N **Ans.** ----------