
A single stage reciprocating air compressor has a swept volume of 2000 cm3 and runs at 800 rpm.

Q2 b) Let V_s = swept volume

$V_c = V_3$ = clearance volume

We have

$V_s = V_1 - V_3$

$V_s = V_1 - 0.05 V_s$

$V_1 = 1.05 V_s$

Indicated Power

$$= \frac{n}{n-1} P_1 V_1 \left(\left(\frac{P_2}{P_1} \right)^{\frac{n-1}{n}} - 1 \right) \times \frac{N}{60}$$

$$= \frac{1.25}{1.25-1} \times 0.013 \times 10^5 \times 0.05 \times 2000 \times \left[\left(\frac{8}{1} \right)^{\frac{0.25}{1.25}} - 1 \right] \times \frac{800}{60}$$

$= 7.313$ kW

Isothermal Power $= P_1 V_1 \log \left(\frac{P_2}{P_1} \right) \times \frac{N}{60}$

$$= \left(1.013 \times 10^5 \times 1.05 \times \frac{2000}{10^6} \times \log \frac{8}{1} \right) \times \frac{800}{60}$$

$= 5.8978$ kW

Isothermal efficiency

$$= \frac{\text{Isothermal Power}}{\text{Indicated Power}}$$

$$= \cancel{\frac{7.313}{5.8}} = \frac{5.8978}{7.313} = 80.6\%$$

Differentiate vapour compression and vapour absorption refrigeration system.....

Differences between Vapour Absorption and Vapour Compression refrigeration system

No	Vapour Absorption system	Vapour Compression System
1.	Uses low grade energy like heat. Therefore, may be worked on exhaust systems from I.C engines, etc.	Using high-grade energy like mechanical work.
2.	Moving parts are only in the pump, which is a small element of the system. Hence operation is smooth.	Moving parts are in the compressor. Therefore, more wear, tear and noise.
3.	The system can work on lower evaporator pressures also without affecting the COP.	The COP decreases considerably with decrease in evaporator pressure.
4.	No effect of reducing the load on performance.	Performance is adversely affected at partial loads.
5.	Liquid traces of refrigerant present in piping at the exit of evaporator	Liquid traces in suction line may damage the compressor
6.	Automatic operation for controlling the capacity is easy.	It is difficult.
7	Charging of refrigerant is simple	Charging of refrigerant is difficult
8	Part load performance is low	No effect of variation of load

---

Explain with neat sketch working of non dispersive infra red (NDIR) gas analyser.

Non dispersive infra red gas analyzer (NDIR) : The working principle of infra red gas exhaust gas analyzer is as shown in figure . It works on the principle of hetero atomic gases absorbs infra red energy at distinct and separated wavelength. The absorbed energy raises the temperature and pressure of confined gas. This enables to measure contents of hydro carbon and carbon monoxide. This is a faster method of gas analysis. The standard sample is filled in reference cell R . the sample of gas under testing is filled in cell S .

A four cylinder engine running at 1200 rpm delivers 20 kW

Q1 (B) (a) b.P. = 20 kW

b.P. when one cylinder cut-off

$$b.P. = 2\pi NT$$
$$= 2\pi \times \frac{1200}{60} \times 110$$
$$= \underline{13.82 \text{ kW}}$$

I.P. of one cylinder $= 20 - 13.82$
$= \underline{6.18 \text{ kW}}$

Indicated power of engine $= 4 \times 6.18$
$= \underline{24.72 \text{ kW}}$

Indicated thermal efficiency $\eta_{ith} = \frac{I.P.}{m_f \times C.V.}$

$$= \frac{24.72}{2\times10^{-3} \times 43\times10^{3}}$$
$$= \underline{28.74\%}$$

Fuel consumption = 360 gm/kW-hr

Total fuel consumption for 20 kW $= \frac{360\times20}{1000}$ kg/hr

$$= \frac{360\times20}{1000\times3600} = \underline{2\times10^{-3} \text{ kg/sec}}$$

Explain with neat sketch working of lobe type air compressor

Lobe type air compressor: it is a rotary type of compressor consisting of two rotors which are driven externally. One rotor is connected to drive and second is connected to gear. These two rotors have two or three lobes having epicycloids, hypocycloid or involutes profiles. In the figure two lobes compressor is shown with a inlet arrangement and receiver. A very small clearance is maintained between surfaces so that wear is prevented. Air leakage through this clearance

decreases efficiency of this compressor.

Compare SI and CI engine on the basis…

Difference between SI and CI engines

Sr. No	Basis	SI Engines	CI Engines
1	Fuel used	Gasoline or petrol	Diesel
2	Compression Ratio	Low Average value is 7 to 9	High Average value is 15 to 18
3	Weight	It is light in weight due to less pressure developed	It is heavy in weight due to high pressure developed
4	Noise and vibration	Level is less due to low compression ratio	Level is high due to high compression ratio.

A two stage air compressor with perfect intercooling takes in air at 1 bar pressure and 27 °C

The minimum work for two stage air compressor

$$W = \frac{2n}{n-1} \frac{P_1 V_1}{mRT_1} \left[\left(\frac{P_3}{P_1}\right)^{\frac{n-1}{2n}} - 1 \right]$$

$$= \frac{2 \times 1.3}{1.3-1} \times 1 \times 0.287 \times 300 \left[\left(\frac{9}{1}\right)^{\frac{1.3-1}{1.3 \times 2}} - 1 \right]$$

$$= 8.667 \times 86.1 \times (0.2886)$$

$$= 215.36 \text{ kJ/kg}$$

$$PV^n = C$$

Conside process 1-2'

$$\frac{T_2'}{T_1} = \left(\frac{P_2}{P_1}\right)^{n-1/n}$$

$$\frac{T_2'}{300} = \left(\frac{3}{1}\right)^{\frac{1.3-1}{1.3}}$$

$$T_2' = 386.56°K$$

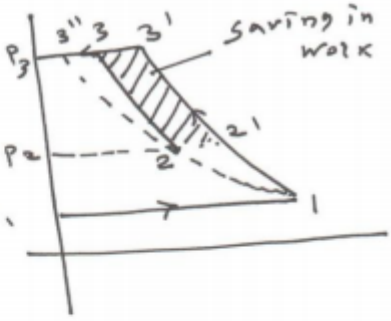

Heat Rejected to intercooler $= mC_p(T_2' - T_1)$

$$= 1.005(386 - 300)$$

$$= 86.99 \text{ kJ/kg}$$

State four assumptions made for air standard cycle.

Assumption made in air standard cycle Following assumption made in actual cycle to analysis as air standard cycle. 1. The working fluid is perfect gas. 2. There is no change in mass of the working medium. 3. All the process that constitutes the cycle is reversible. 4. Heat is assumed to be supplied from a constant high temperature source and not from chemical reaction during the cycle. 5. There are no heat losses. 6. The working medium has constant specific heats throughout the cycle.

How can the speed control of any actuator be achieved.....

Speed control of any actuator (Cylinders or motors) can be controlled using flow control valves. Varying the rate of flow of oil will vary the speed of the actuator.(Explanation 1Mark) In meter in circuit, rate of flow of oil is controlled at inlet of the actuator. In meter out circuit, rate of flow of oil is controlled at outlet of the actuator. In bleed off circuit, rate of flow of oil is controlled in the by-pass line leading towards the tank.

Draw constructional details of pneumatic hose.....

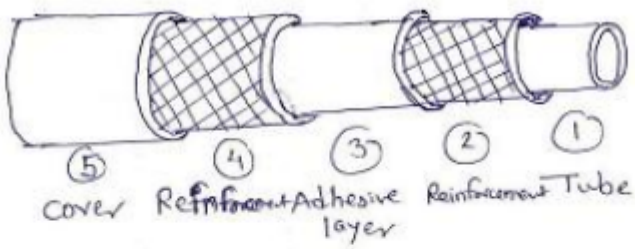

Pneumatic hose is made of several layers with metal wire braiding between them.

S.N	Layer	Function	Material
1	Tube	Conveys the hydraulic compressed air	Polyethylene
2	First reinforcement	Protects and strengthens the tube	Metal wire(steel or copper)

3	Adhesive layer	Holds the reinforcement layers, protects against vibrations	Rubber
4	Second reinforcement	Protects the first reinforcement	Woven yarn (cotton, nylon , polyester synthetic fiber)
5	Outer cover	Protects from abrasions, duct, vibrations, sunrays	Polyethylene

Hose is required in pneumatic circuits:

- They are easy to accommodate and to connect with in the available space.
- Carry compressed air without pressure drop.

Pages

« first

‹ previous

1

2

3

4

5

6

7

8

9

...

next ›

last »
